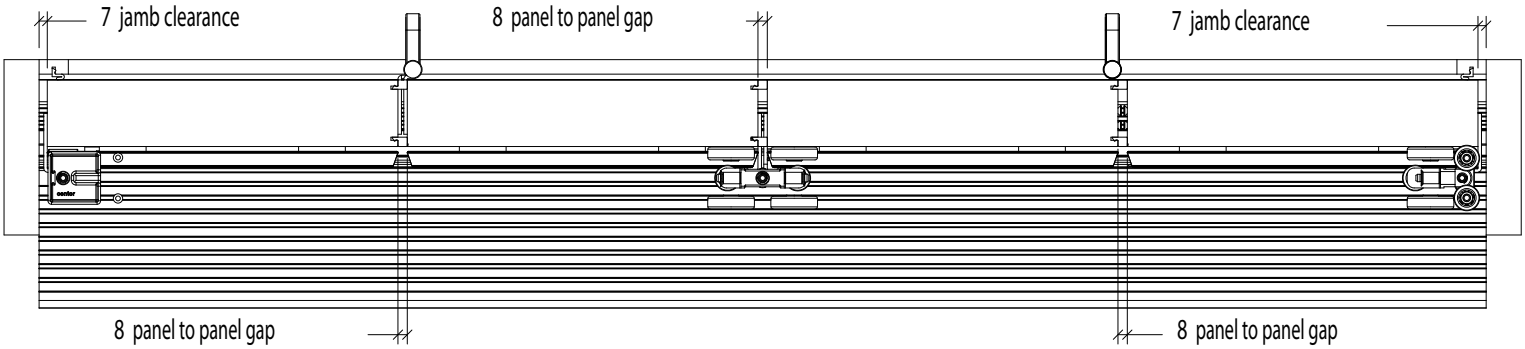
7 jamb clearance
8 panel to panel gap
7 jamb clearance
8 panel to panel gap
8 panel to panel gap