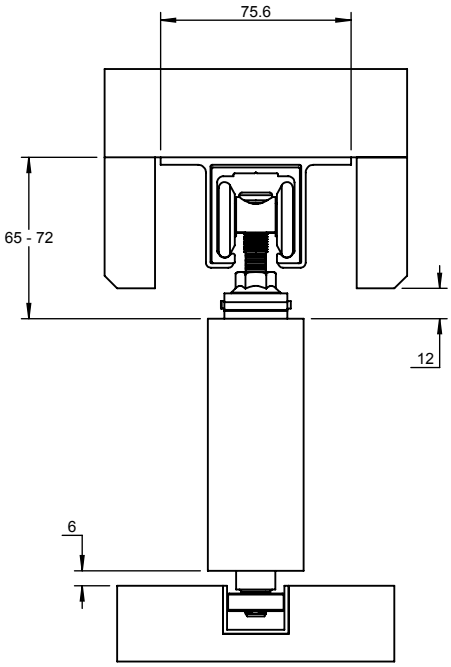
75.6
65 - 72
12
6