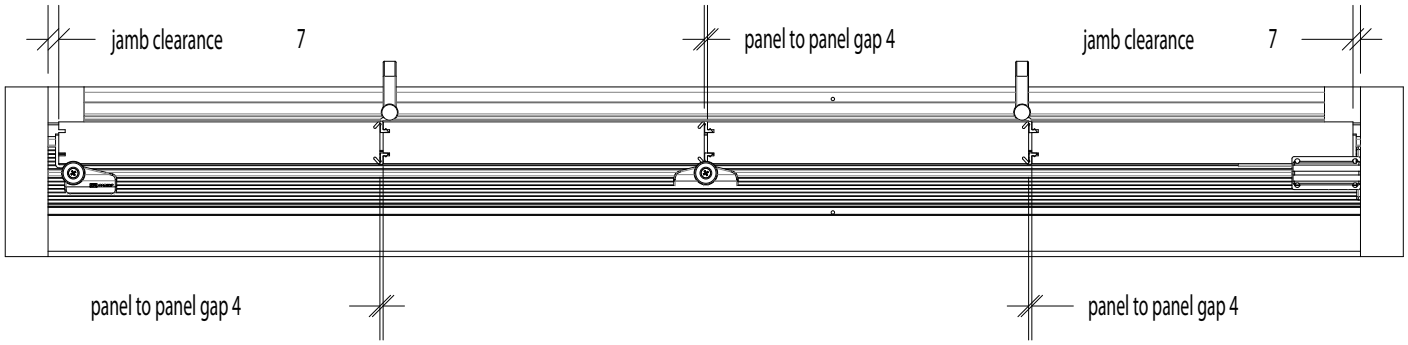
jamb clearance
7
panel to panel gap 4
jamb clearance
7
panel to panel gap 4
panel to panel gap 4