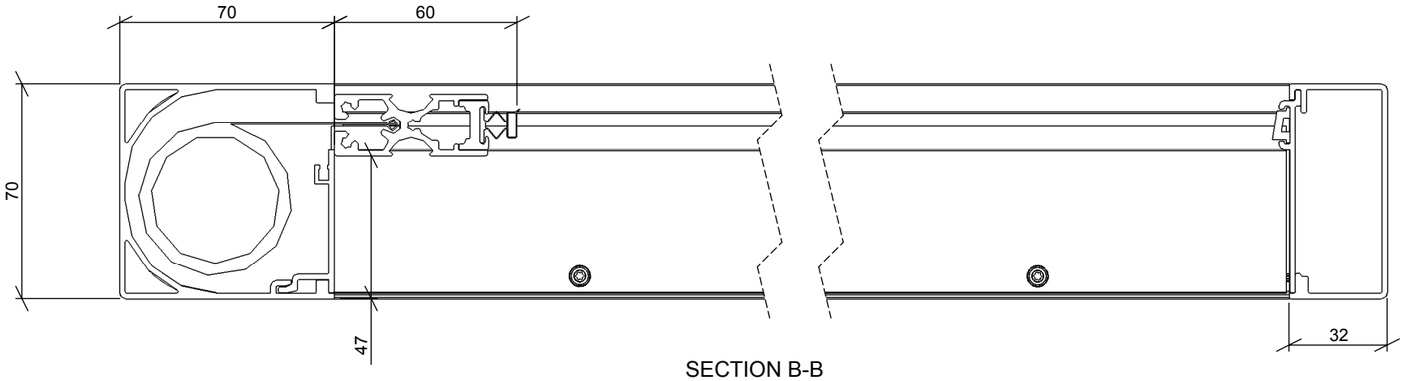

SECTION B-B

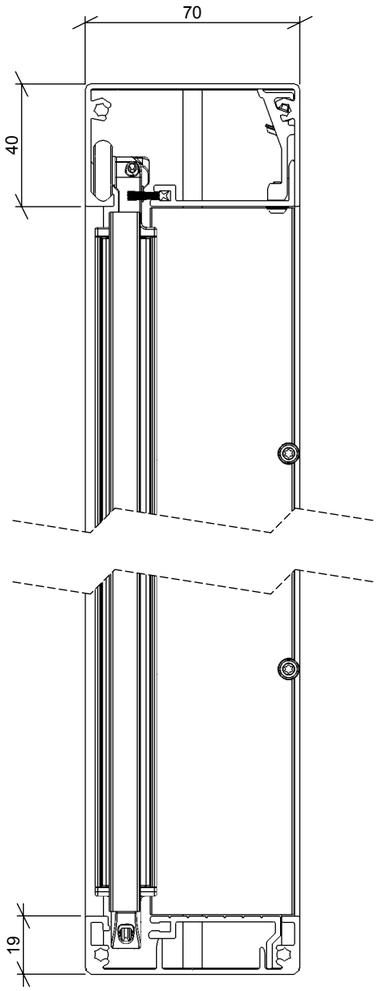

SECTION A-A

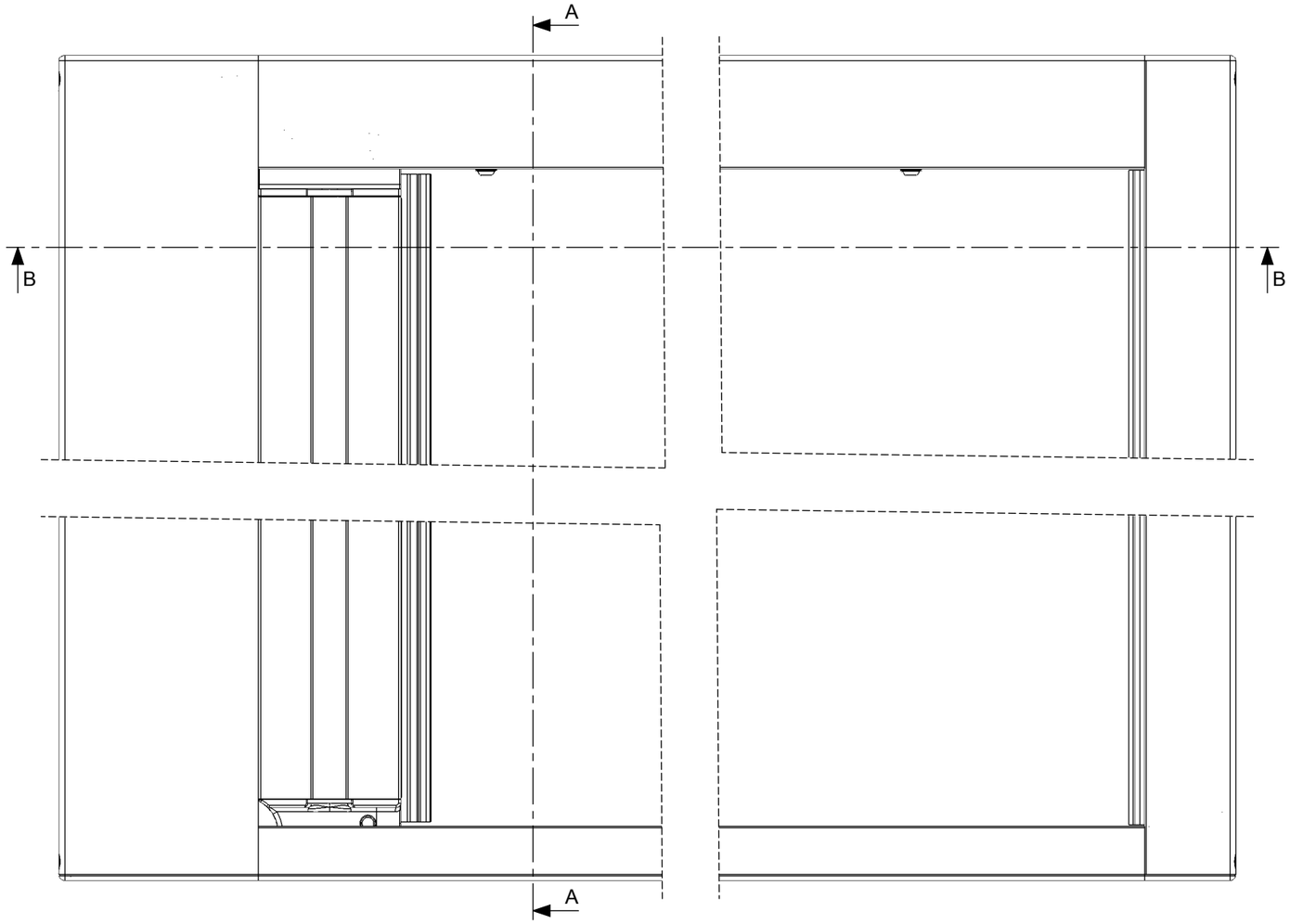

S2 Screen Product Detail - Single Screen

Date	13 Sept 2017	Scale	1:2	Dwg no	S2-003
Revision	A	Page size	A3	Pages	1 of 1

centor®

This document is copyright and remains the property of Centor