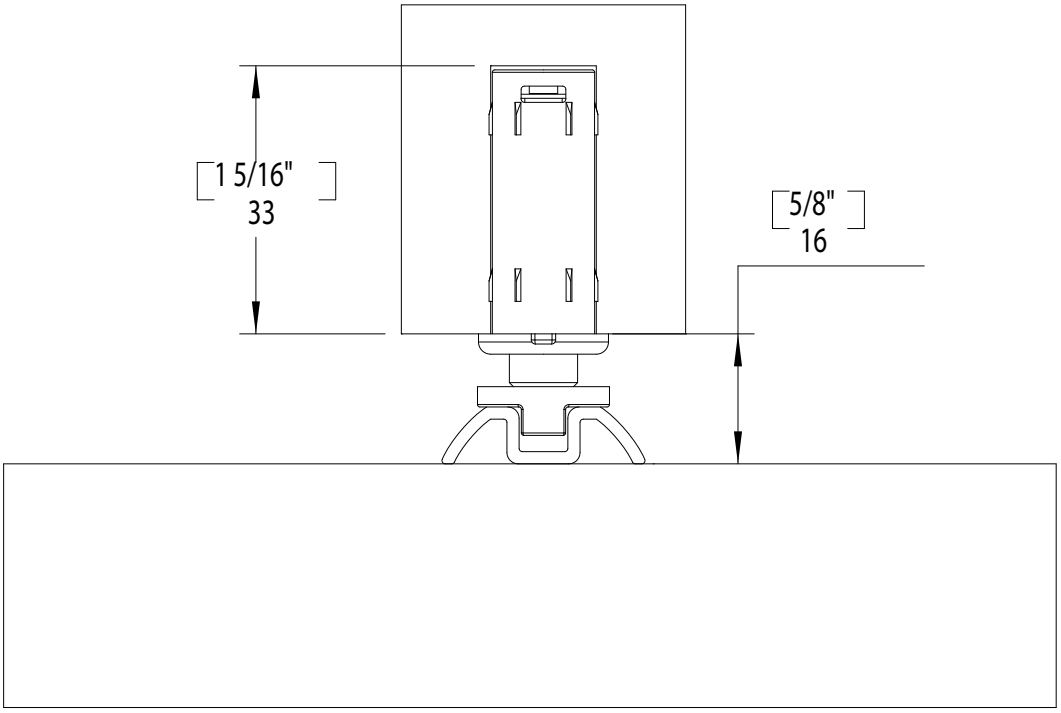
1 5/16"
33
5/8"
16