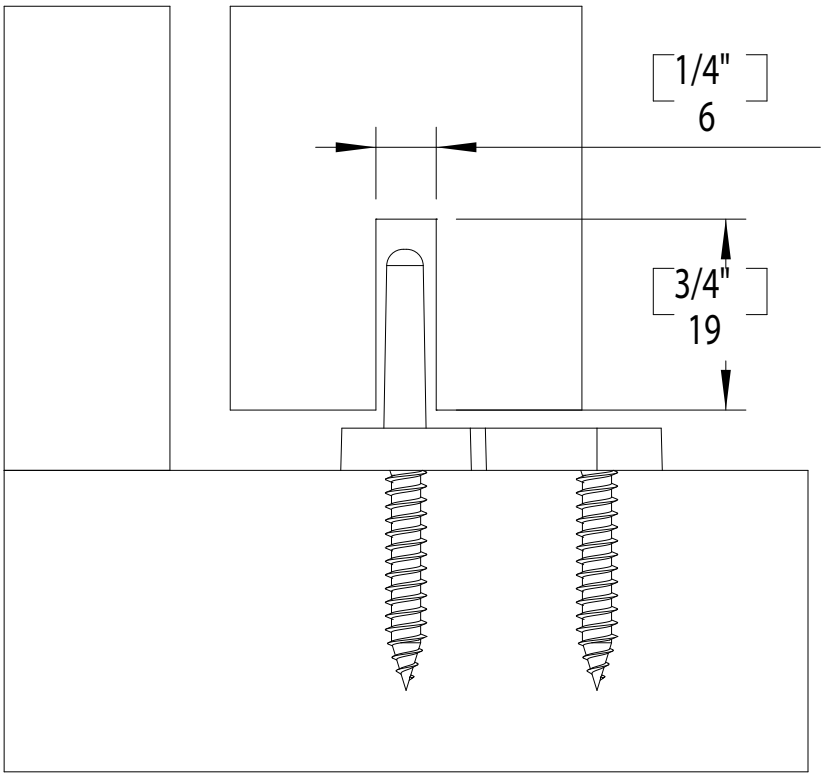
1/4"
6
3/4"
19