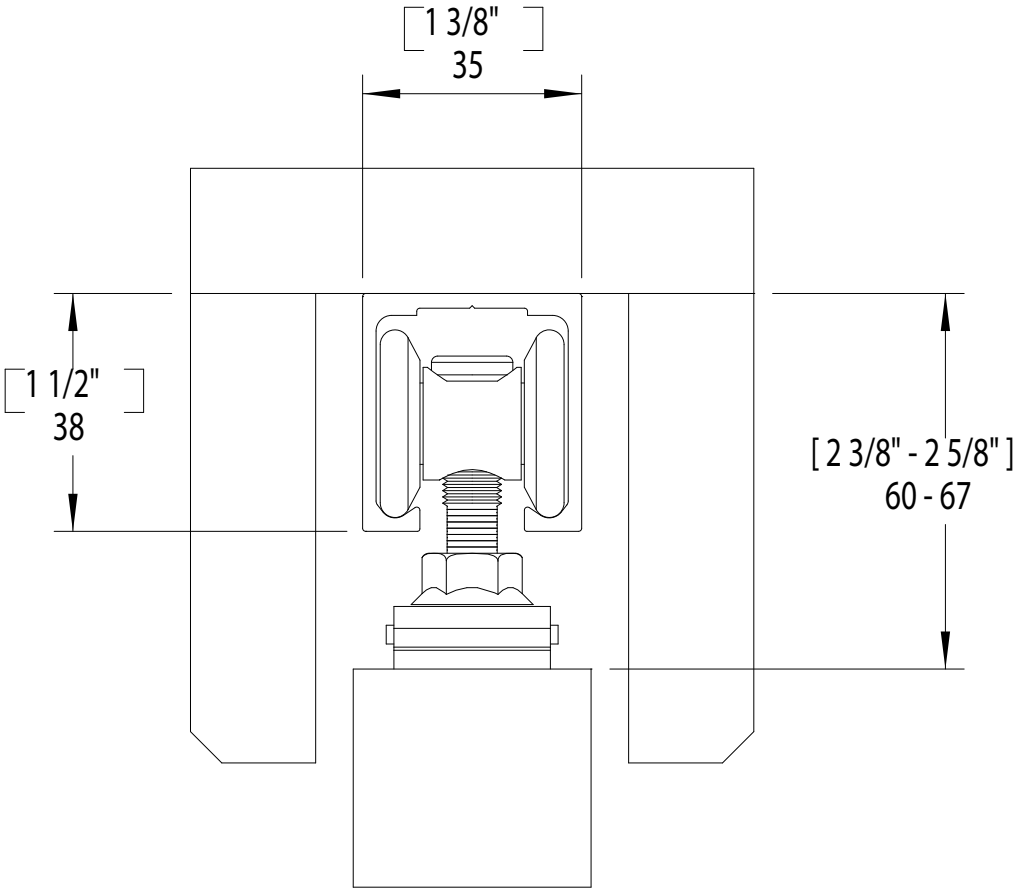
[1 3/8"]
35
[1 1/2"]
38
[2 3/8" - 2 5/8"]
60 - 67