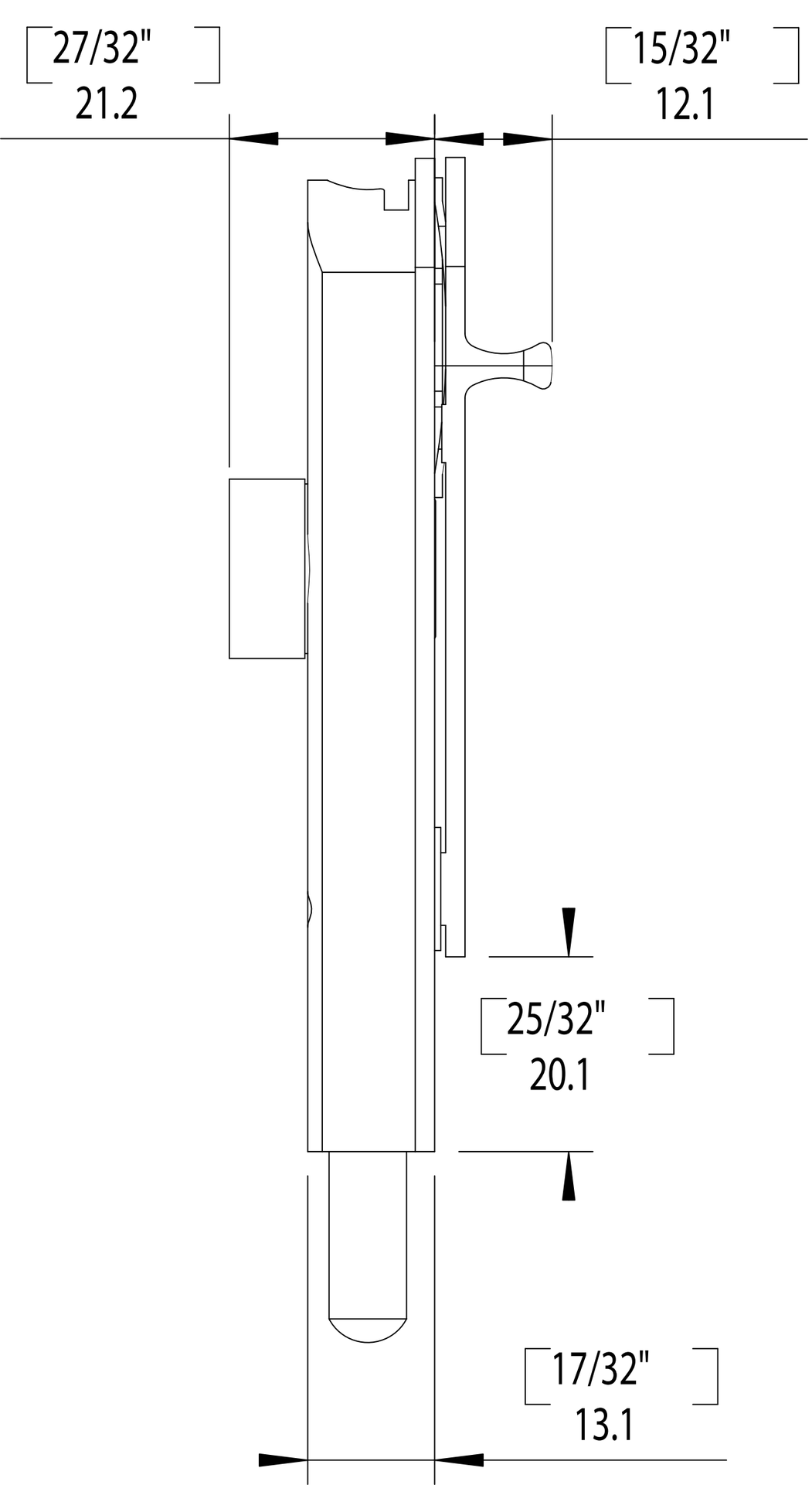
27/32"
21.2
15/32"
12.1
25/32"
20.1
17/32"
13.1

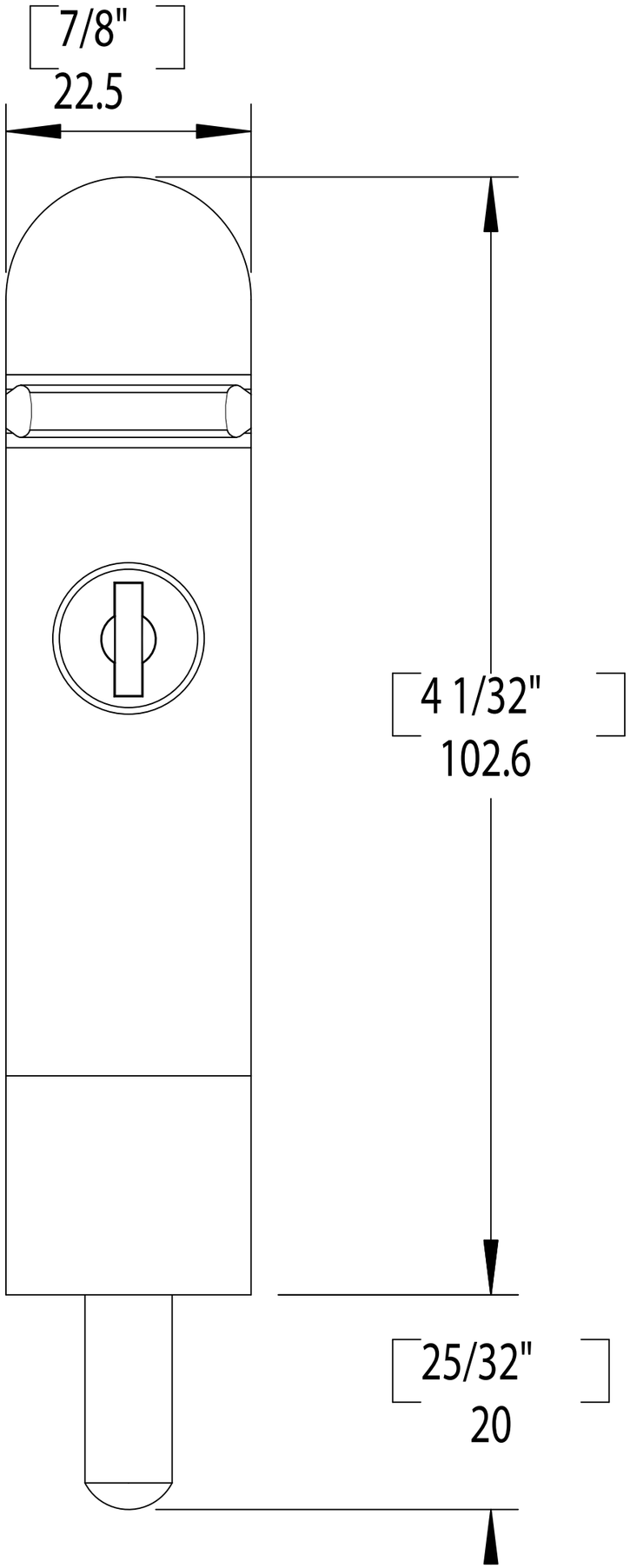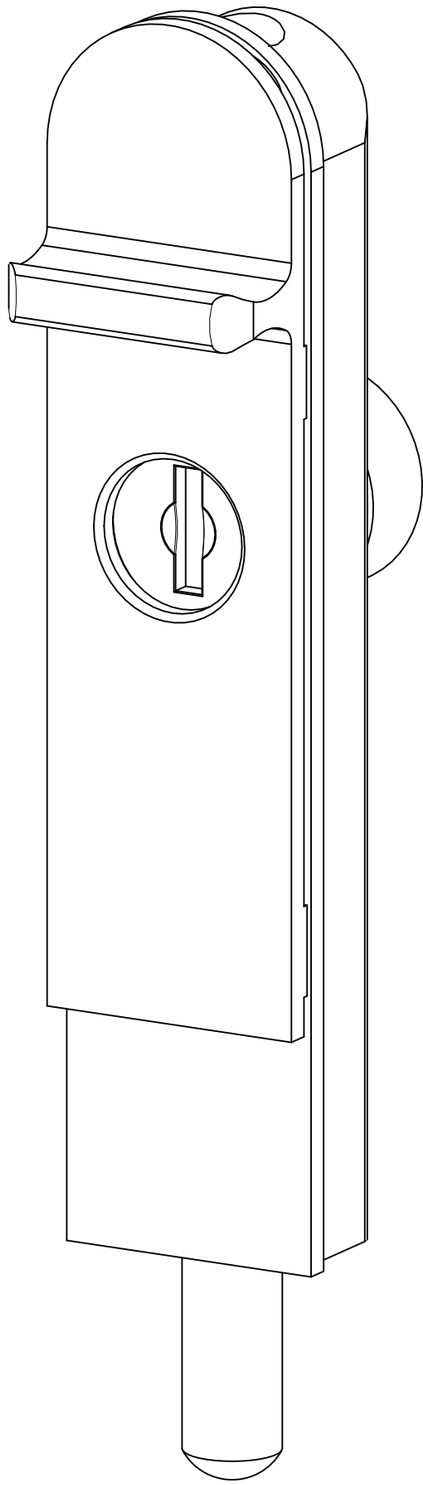
7/8"
22.5
4 1/32"
102.6
25/32"
20