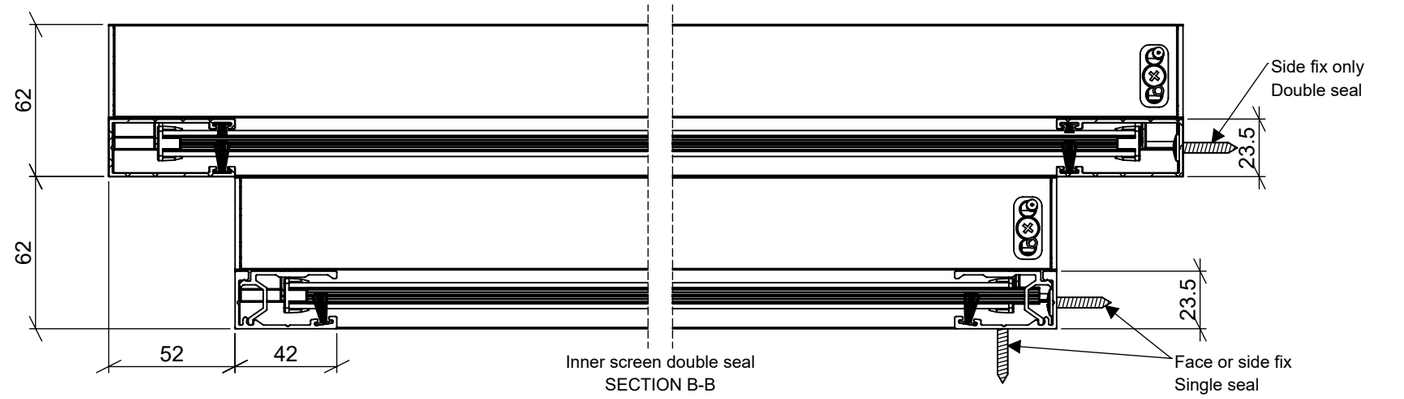

Inner screen double seal
SECTION B-B

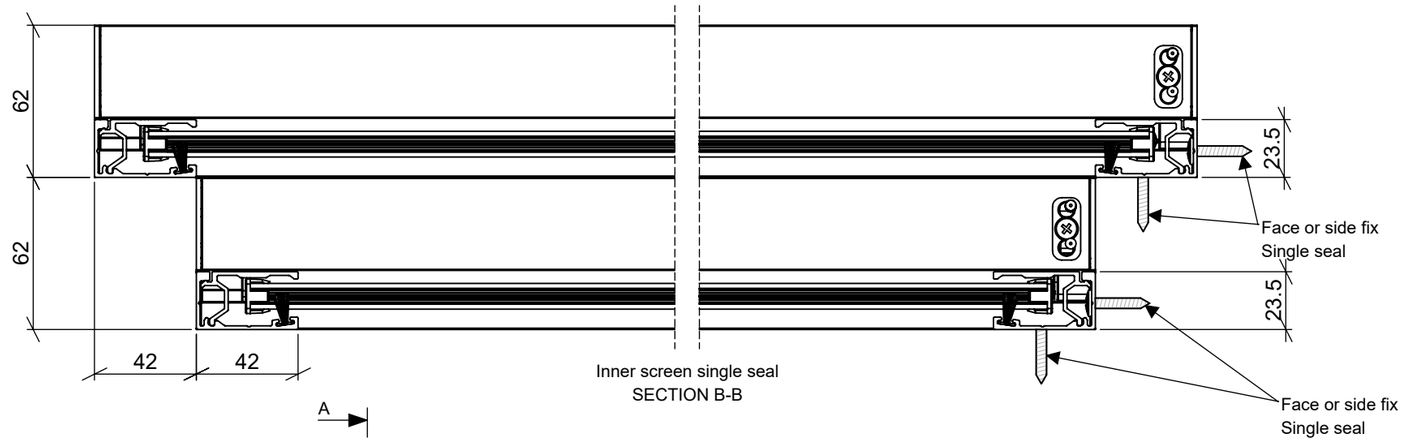

Inner screen single seal
SECTION B-B

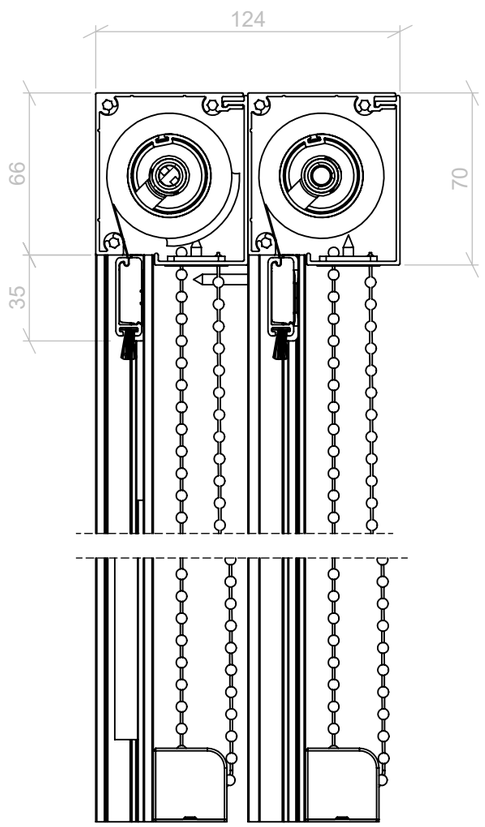

SECTION A-A

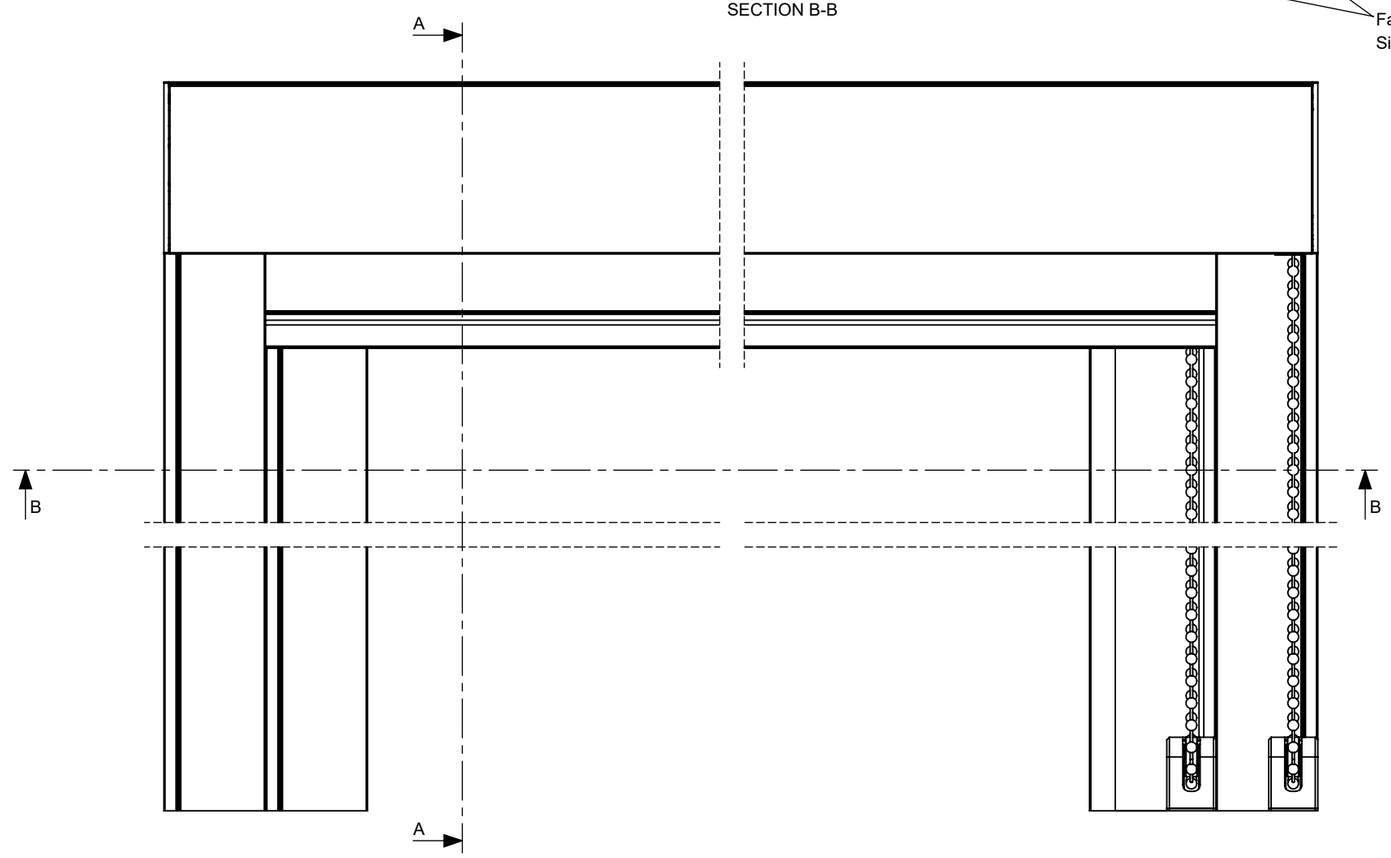

S6 Screen Product Details - Double Screen

Date	02Feb2021	Scale	1:2.5	Dwg no	S6-004
Revision	C	Page size	A3	Pages	1 of 1

centor

This document is copyright and remains the property of Centor