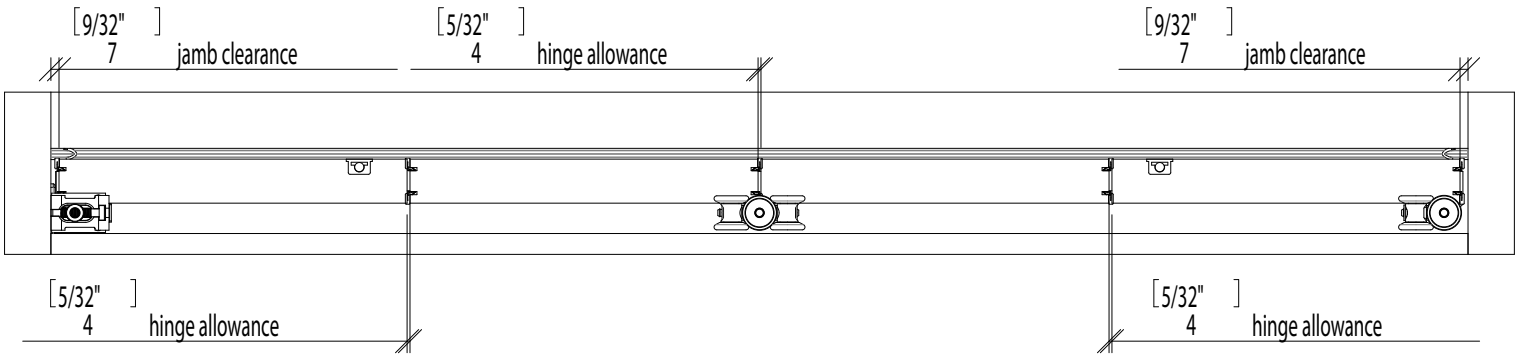
[9/32"]
7
jamb clearance
[5/32"]
4
hinge allowance
[9/32"]
7
jamb clearance
[5/32"]
4
hinge allowance
[5/32"]
4
hinge allowance