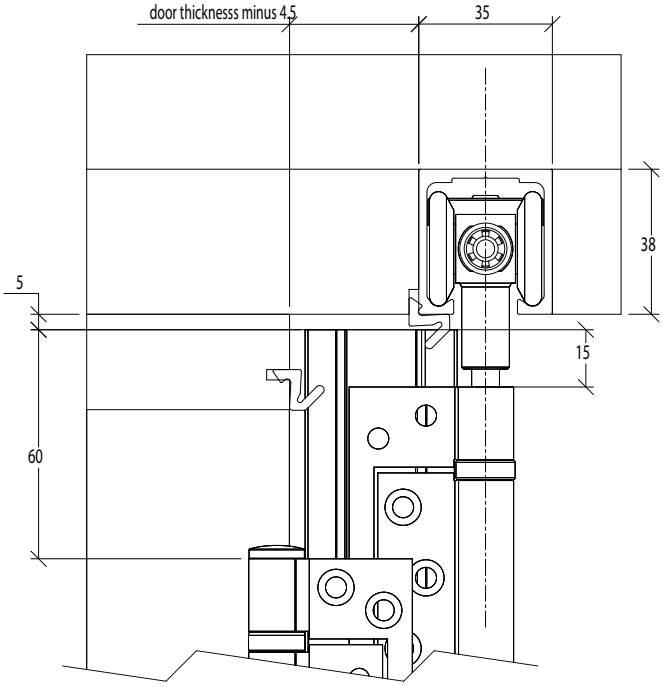

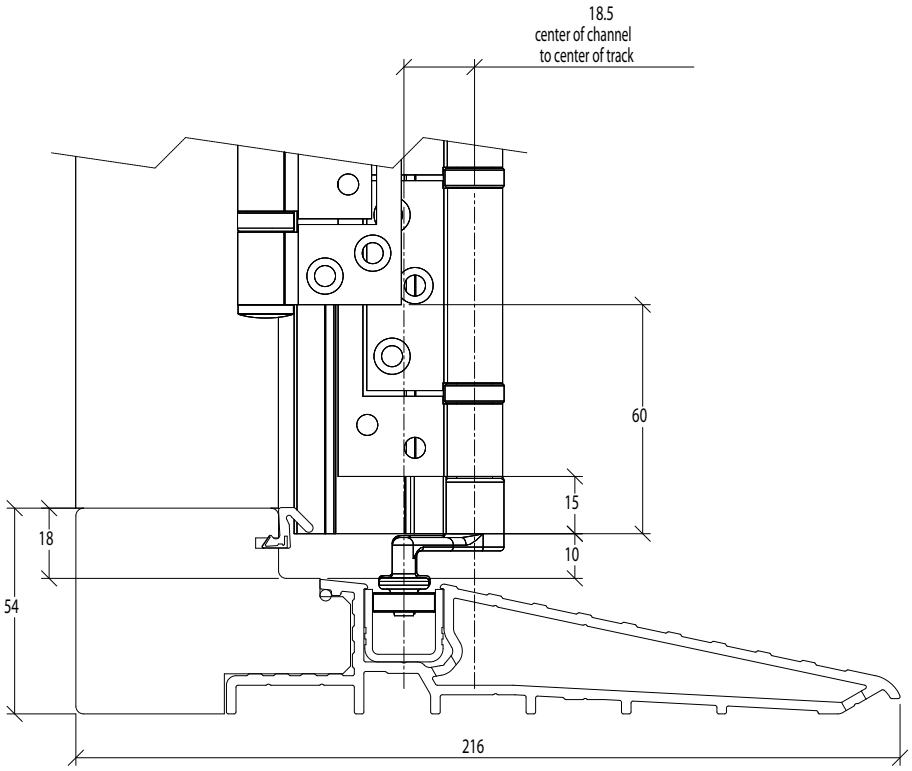

AQ21 recommended for panel and frame seals

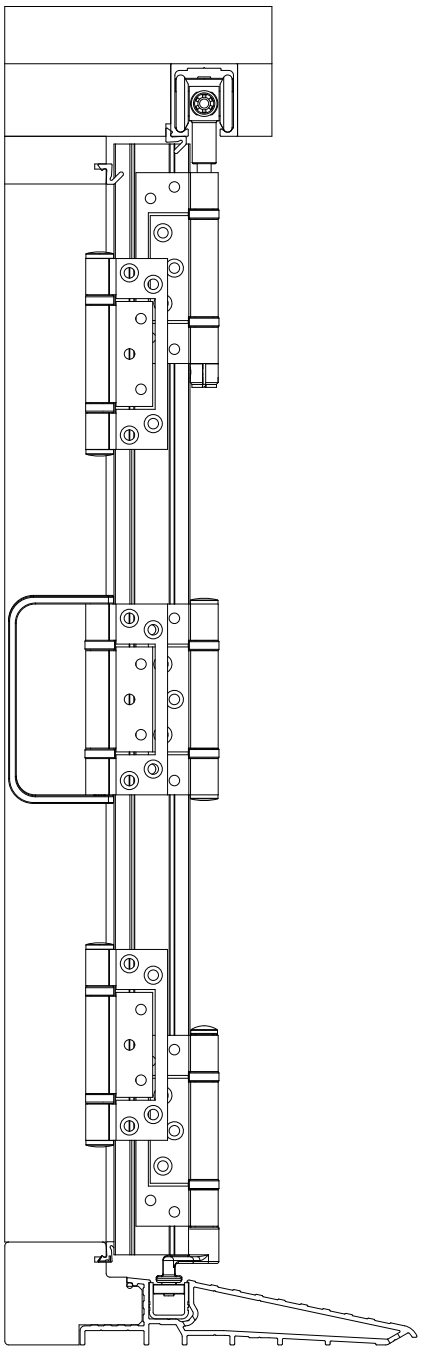

E2-200 M