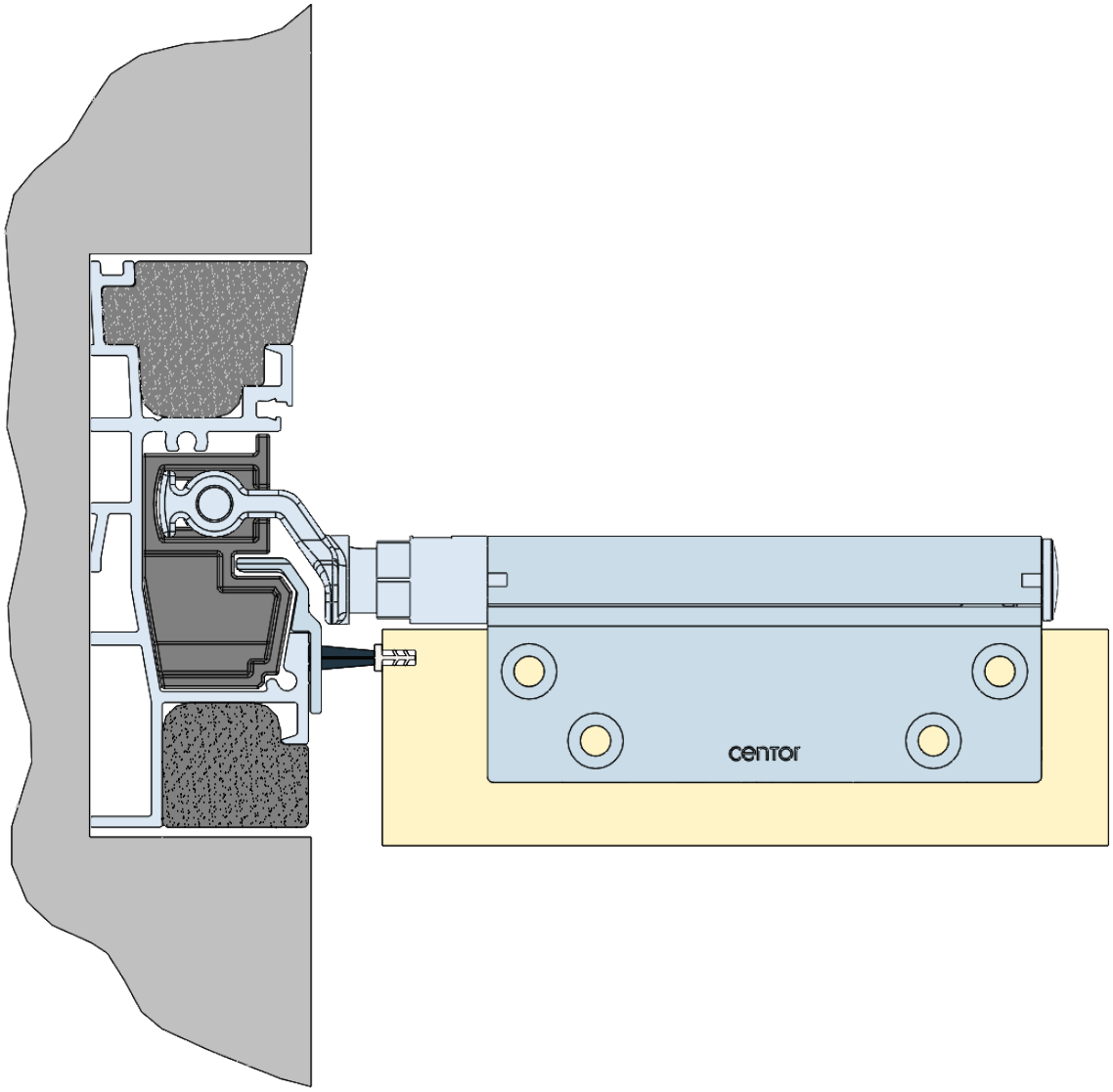
centor