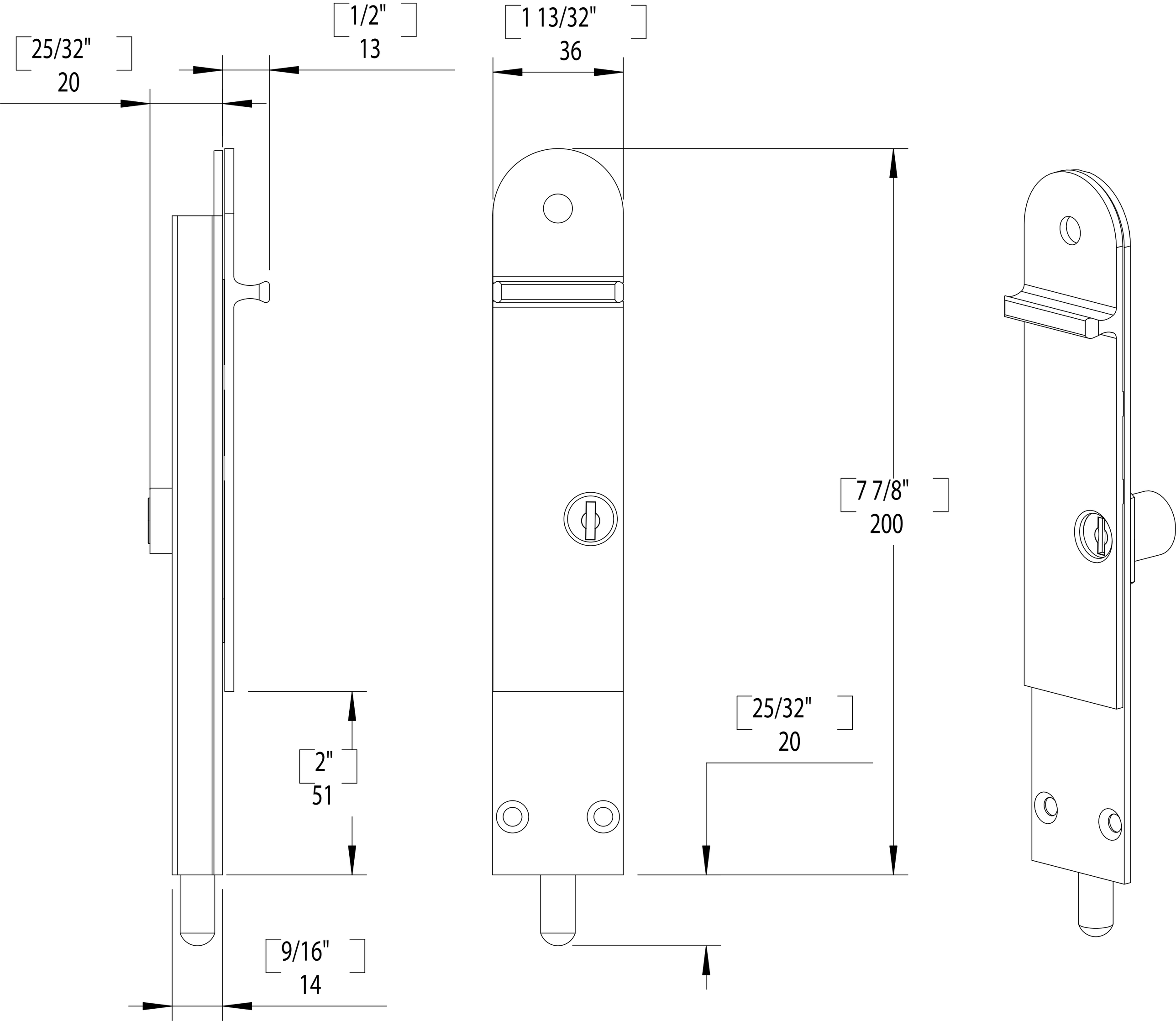
25/32"
20
1/2"
13
1 13/32"
36
7 7/8"
200
25/32"
20
2"
51
9/16"
14