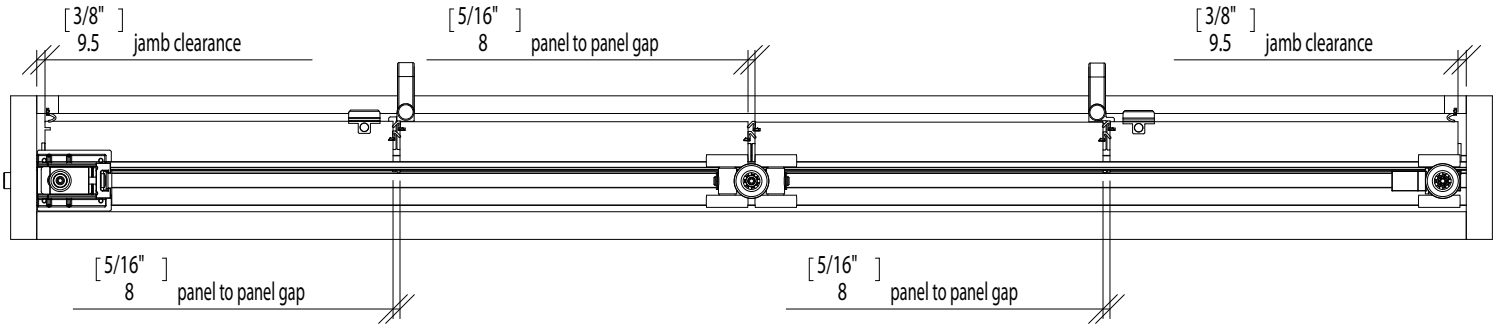
[3/8"]
9.5 jamb clearance
[5/16"]
8 panel to panel gap
[3/8"]
9.5 jamb clearance
[5/16"]
8 panel to panel gap
[5/16"]
8 panel to panel gap

20.0