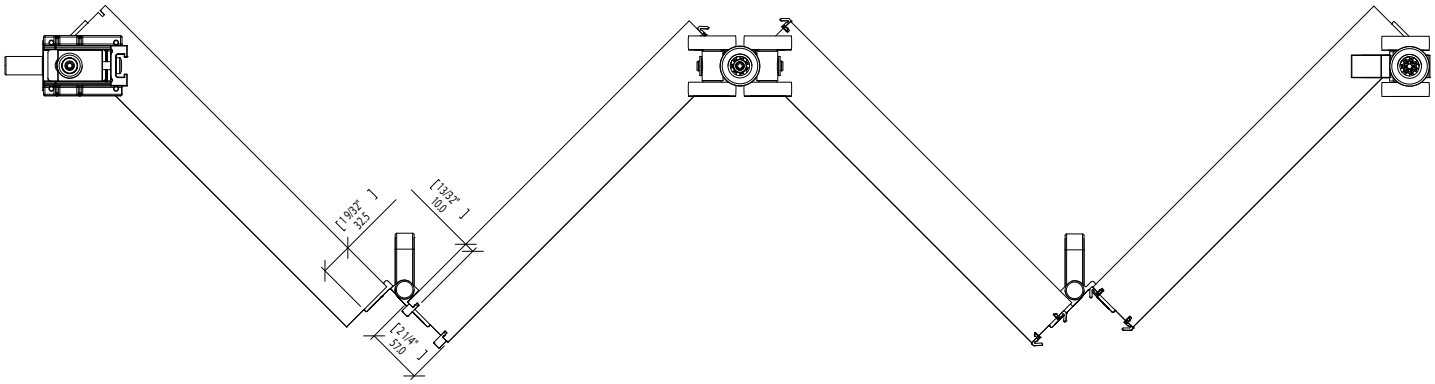
[1 9/32"]
32,5
[13/32"]
10,0
[2 1/4"]
57,0